ELECTRICAL SYMBOL LEGEND

SYMBOL	DESCRIPTION
	LED LIGHTING FIXTURE – LETTER(S) DENOTE TYPE. SEE LIGHTING FIXTURE SCHEDULE.
	COMPACT FLUORESCENT, LED, OR HID LIGHTING FIXTURE. LETTER(S) DENOTE TYPE. SEE LIGHTING FIXTURE SCHEDULE.
	EMERGENCY AND EXIT LIGHT. LETTER(S) DENOTE TYPE – SEE LIGHTING FIXTURE SCHEDULE. WALL OR CEILING MOUNTED.
	PANELBOARD – SEE RESPECTIVE PANELBOARD SCHEDULE. PROVIDE MECHANICALLY FASTENED PHENOLIC LABEL. SQUARE-D OR EQUAL.
A-1	BRANCH CIRCUIT CONDUIT RUN CONCEALED IN WALL OR ABOVE CEILING. ARROW INDICATES CIRCUIT HOMERUN, HASHMARKS INDICATE NUMBER OF CONDUCTORS, ABSENCE OF HASHMARKS INDICATES TWO CONDUCTORS PLUS GROUND. "A" DENOTES PANELBOARD SERVING CIRCUIT, "1" INDICATES CIRCUIT BREAKER SPACE IN PANELBOARD. SEE RESPECTIVE PANEL CIRCUIT SCHEDULE. MINIMUM CIRCUIT SIZE = 2#12,1#12G,1/2"C. SHARING OF THE NEUTRAL CONDUCTOR BETWEEN CIRCUITS IS PROHIBITED.
	INDICATES ELECTRICAL CONDUIT ROUTED UNDERGROUND/SLAB
WP	INDICATES WIRING DEVICE WITH CAST ALUMINUM WEATHER PROOF COVER PLATE.
GFI	INDICATES GROUND FAULT CIRCUIT INTERRUPTED TYPE DUPLEX RECEPTACLE.
C	INDICATES DEVICE FLUSH MOUNTED HORIZONTALLY 6" ABOVE COUNTERTOP OR IN BACKSPLASH.
CL	INDICATES DEVICE MOUNTED IN CEILING
	NON-FUSED DISCONNECT, HEAVY DUTY (SAFETY) SWITCH – SIZE AND TYPE AS NOTED. TOP OF SWITCH 6'-6" A.F.F. PROVIDE PHENOLIC LABEL MOUNTED ABOVE DISCONNECT. SQUARE-D OR EQUAL.
	FUSED DISCONNECT, HEAVY DUTY (SAFETY) SWITCH – SIZE AND TYPE AS NOTED. TOP OF SWITCH 6'-6" A.F.F. PROVIDE PHENOLIC LABEL MOUNTED ABOVE DISCONNECT. A.F.F. FUSES SHALL MATCH SERVING BREAKER UNLESS OTHERWISE DIRECTED BY ELEVATOR INSTALLER.
M	ELECTRIC MOTOR– SEE RESPECTIVE EQUIPMENT SCHEDULE
$M	MANUAL MOTOR STARTER SWITCH, 2 POLE, 30 AMP, MOUNTED IN A 4" SQUARE JUNCTION BOX WITH AN INDUSTRIAL RAISED COVER MOUNTED AT EQUIPMENT UNLESS NOTED OTHERWISE.
	20A, 125 VAC 2P., 3W., GROUNDING TYPE, DUPLEX RECEPTACLE. FLUSH WALL MTD. 18" A.F.F. UNLESS NOTED OTHERWISE.
	20A, 125VAC, 2P., 3W., NEMA 5-20R INDICATES GROUND FAULT CIRCUIT INTERRUPTING RECEPTACLE. FLUSH WALL MTD. 18" A.F.F. UNLESS NOTED OTHERWISE. DEVICES LOCATED EXTERIOR TO THE BUILDING SHALL BE A LISTED WEATHER-RESISTANT TYPE.
	20A, 125VAC 2P., 3W., GROUNDING TYPE, DOUBLE DUPLEX RECEPTACLE. FLUSH WALL MTD. 18" A.F.F. UNLESS NOTED OTHERWISE.
J	JUNCTION BOX LOCATION. SIZE AND TYPE AS REQUIRED.
PC	PHOTOCELL MOUNTED FACING NORTH. REFERENCE CONNECTION DIAGRAM FOR ADDITIONAL INFORMATION.
C1 C2	CONTACTOR FOR EXTERIOR LIGHTING, KITCHEN HOOD CONTROL
TC	TIMECLOCK FOR INTERIOR LIGHTING
$	20A, 120/277 VAC SINGLE POLE TOGGLE SWITCH. FLUSH WALL MOUNTED 48" A.F.F. UNLESS NOTED OTHERWISE.
$MO	LOW VOLTAGE MOMENTARY SWITCH FLUSH WALL MOUNTED 48" A.F.F. UNLESS NOTED OTHERWISE. REFERENCE WIRING DIAGRAM FOR ADDITIONAL INFORMATION.
$T	DIGITAL TIME SWITCH FOR AFTER HOURS CONTROL AS REQUIRED BY THE FLORIDA ENERGY CONSERVATION CODE. SWITCH SHALL BE PROGRAMMED FOR A MAXIMUM OF 2 HOURS.
	DUAL TECHNOLOGY CEILING-MOUNTED 360° OCCUPANCY SENSOR, WATTSTOPPER CAT# DT-305. SEE LIGHTING CONTROL WIRING DIAGRAM FOR ADDITIONAL INFORMATION. MOUNT AT LOCATION AS INDICATED ON PLANS. ARROWS INDICATE DEVICE ORIENTATION. SENSOR SHALL BE ORIENTED AS INDICATED ON PLANS. DEVICE SHALL BE PROGRAMMED SUCH THAT BOTH TECHNOLOGIES ARE REQUIRED TO TURN LIGHTS ON AND SUCH THAT EITHER TECHNOLOGY SHALL "HOLD" LIGHTS "ON". "AUTOMATIC OFF" TIME DELAY DURATION SHALL BE 30 MINUTES MAXIMUM. SENSOR SHALL BE PROGRAMMED FOR "MANUAL ON". WHERE A DEVICE IS NOTATED WITH AN "A," IT SHALL BE PROGRAMMED FOR AUTOMATIC ON.
PP	POWER PACK RELAY FOR CONTROL OF LIGHTING CONTROLS, EQUAL TO WATTSTOPPER CAT# BZ-150. MOUNT DEVICE IN AN ACCESSIBLE LOCATION. SEE TYPICAL OCCUPANCY SENSOR WIRING DIAGRAM FOR REQUIREMENTS.

ELECTRICAL SYMBOL LEGEND CONTINUED

SYMBOL	DESCRIPTION
FACP	ADDRESSABLE INTELLIGENT, FIRE ALARM SYSTEM CONTROL PANEL SURFACE MOUNTED – WITH 2 LINE DIALER CONNECTED TO TELEPHONE BACKBOARD.
F	FIRE ALARM SYSTEM ADDRESSABLE PULL STATION – SEMI FLUSH MOUNTED 48" A.F.F. TO TOP UNLESS NOTED OTHERWISE. DEVICES IN THE GYMNASIUM MARKED WITH A "W" SHALL BE PROVIDED WITH A STOPPER II COVER AND LIFT ACTUATING HORN.
SD	ADDRESSABLE INTELLIGENT CEILING MOUNTED FIRE ALARM SYSTEM PHOTOELECTRIC TYPE SMOKE DETECTOR WITH BASE.
15 F	FIRE ALARM SYSTEM HORN / STROBE DEVICE SEMI FLUSH WALL MOUNTED AT 84" A.F.F. OR 6" BELOW THE FINISHED CEILING WHICHEVER IS LOWER, UNLESS NOTED OTHERWISE. CANDELA RATING AS NOTED. ALL STROBES IN COMMON SPACES OR CORRIDORS SHALL BE SYNCHRONIZED. "WP" INDICATES WEATHERPROOF DEVICE MOUNTED TO WEATHERPROOF ENCLOSURE.
15 F	FIRE ALARM SYSTEM VISUAL DEVICE SEMI FLUSH WALL MOUNTED AT 84" A.F.F. OR 6" BELOW THE FINISHED CEILING WHICHEVER IS LOWER, UNLESS NOTED OTHERWISE. CANDELA RATING AS NOTED. ALL STROBES IN COMMON SPACES OR CORRIDORS SHALL BE SYNCHRONIZED. "WP" INDICATES WEATHERPROOF DEVICE MOUNTED TO WEATHERPROOF ENCLOSURE.
S R	ADDRESSABLE INTELLIGENT FIRE ALARM SYSTEM DUCT MOUNTED PHOTOELECTRIC SMOKE DETECTOR COMPLETE WITH HOUSING AND AIR SAMPLING TUBES. "S" DENOTES DETECTOR IN SUPPLY DUCT; "R" DENOTES DETECTOR IN RETURN DUCT.
R	FIRE ALARM SYSTEM INTERFACE MODULE – MOUNTED AT EQUIPMENT.
FS	SPRINKLER SYSTEM FLOW SWITCH. FURNISHED AND INSTALLED BY FIRE PROTECTION (SPRINKLER) SYSTEM CONTRACTOR, AND CONNECTED TO FIRE ALARM SYSTEM CONTROL PANEL VIA AN ADDRESSABLE MONITOR MODULE BY FIRE ALARM SYSTEM CONTRACTOR.
TS	SPRINKLER SYSTEM TAMPER SWITCH. FURNISHED AND INSTALLED BY FIRE PROTECTION (SPRINKLER) SYSTEM CONTRACTOR, AND CONNECTED TO FIRE ALARM SYSTEM CONTROL PANEL VIA AN ADDRESSABLE MONITOR MODULE BY FIRE ALARM SYSTEM CONTRACTOR.
H	ADDRESSABLE INTELLIGENT FIRE ALARM SYSTEM HEAT DETECTOR RATE OF RISE TYPE.
ANN	FLUSH MOUNT, ADDRESSABLE, FIRE ALARM REMOTE ANNUNCIATOR PANEL.
M	ADDRESSABLE MONITOR MODULE.
	DUPLEX VOICE/DATA OUTLET IN A 4" SQUARE BOX WITH SINGLE GANG EXTENSION RING. DEVICE MOUNTED 18" A.F.F. UNLESS NOTED OTHERWISE WITH 3/4" CONDUIT UP IN WALL TO 6" ABOVE CEILING AND OUT TO ABOVE ACCESSIBLE CEILING. PROVIDE WIRES AS REQUIRED TO TERMINATION POINT. COORDINATE TERMINATION POINT AND ALL REQUIREMENTS WITH UTILITY.
	CABLE TV OUTLET IN A 4" SQUARE BOX WITH SINGLE GANG EXTENSION RING. DEVICE MOUNTED 18" A.F.F. UNLESS NOTED OTHERWISE WITH 3/4" CONDUIT UP IN WALL TO 6" ABOVE CEILING AND OUT TO ABOVE ACCESSIBLE CEILING. PROVIDE WIRES AS REQUIRED TO TERMINATION POINT. COORDINATE TERMINATION POINT AND ALL REQUIREMENTS WITH UTILITY.

SYMBOLS NOTES:

1. ALL OUTLETS SHALL BE FLUSH MOUNTED.
2. MOUNTING HEIGHTS ARE FROM THE CENTER LINE OF THE DEVICE.
3. ALL SINGLE GANG AND TWO GANG DEVICES SHALL USE A 4" SQ. BOX WITH EXTENSION RING.
4. ALL MULTI – GANG DEVICES SHALL USE A COMMON COVER PLATE
5. COLORS FOR ALL DEVICES (i.e. SWITCHES, RECEPTACLES, TELEPHONE OUTLETS, ETC.) AND THEIR COVERPLATES SHALL BE DETERMINED BY THE ARCHITECT. UNLESS NOTED OTHERWISE.
6. A.F.G. INDICATES MOUNTING HEIGHT ABOVE FINISHED GRADE.
7. A.F.F. INDICATES MOUNTING HEIGHT ABOVE FINISHED FLOOR.
8. DO NO INSTALL OUTLETS BACK TO BACK.
9. ALL 120V 20A CIRCUITS EXCEEDING 80'-0" IN LENGTH SHALL UTILIZE #10 WIRE.
10. ALL 120V 20A CIRCUITS EXCEEDING 140'-0" IN LENGTH SHALL UTILIZE #8 WIRE.
11. "PROVIDE" INDICATES THE ELECTRICAL CONTRACTOR SHALL PROVIDE AND INSTALL.

LIGHTING FIXTURE SCHEDULE

THE LIGHTING PACKAGE SHALL BE PROVIDED PER THE LIGHTING FIXTURE SCHEDULE AND ELECTRICAL SPECIFICATIONS. ANY LIGHTING FIXTURE SUBSTITUTIONS SHALL BE SUBMITTED NO LESS THAN 10 DAYS PRIOR TO BID. ACCEPTANCE OF LIGHT FIXTURE SUBSTITUTIONS SHALL BE AT THE SOLE DISCRETION OF THE ARCHITECT/ENGINEER. SUBSTITUTIONS WILL NOT BE CONSIDERED IF SUBMITTED AFTER THE 10 DAY PRIOR APPROVAL DEADLINE. NO LIGHT FIXTURE SUBSTITUTIONS WILL BE APPROVED AFTER BIDDING. SUBSTITUTE PACKAGES MAY BE RESUBMITTED ONE TIME FOLLOWING THE INITIAL ENGINEER'S REVIEW. FAILURE TO PROVIDE AN APPROVED EQUIVALENT PACKAGE WILL RESULT IN DISAPPROVAL OF THE ENTIRE SUBSTITUTE PACKAGE.

MARK	LAMPS	MOUNTING	MANUFACTURER	CATALOG NUMBER
EX1	2W LED'S	CEILING/WALL	EMERGI-LITE	WPREMSNXR
LA4 LA4E	38W LED	RECESSED	LITHONIA	LITHONIA EPANL-2X4-4000-80CRI-35K-MIN1-ZT-MVOLT LITHONIA EPANL-2X4-4000-80CRI-35K-MIN1-ZT-MVOLT-E10WCP
LA5 LA5E	45W LED	RECESSED	LITHONIA	LITHONIA EPANL-2X4-4800-80CRI-35K-MIN1-ZT-MVOLT-DGA24 LITHONIA EPANL-2X4-4800-80CRI-35K-MIN1-ZT-MVOLT-E10WCP-DGA24
LA6 LA6E	55W LED	RECESSED	LITHONIA	LITHONIA EPANL-1X4-6000-80CRI-35K-MIN1-ZT-MVOLT-DGA14 LITHONIA EPANL-1X4-6000-80CRI-35K-MIN1-ZT-MVOLT-E10WCP-DGA14
LA7	55W LED	SUSPENDED	LITHONIA	LITHONIA EPANL-2X4-6000-80CRI-35K-MIN1-ZT-MVOLT-SUSPENSION KIT
W1	17.7W LED	WALL	LITHONIA	FMVTSL 24IN 30K MVOLT
W2	17.7W LED	WALL	LUMINAIRE	TSL9 24IN 40W FAM7 35K CLP MVOLT
W3	36W LED	WALL	LITHONIA	ZL1D-L48-5000-FST-120-35K-80CRI-WH
W4	41W LED	WALL	LITHONIA	ZL1D-L24-3500-FST-120-35K-80CRI-E7W-WH
LD1 LD1E	22.5W LED	RECESSED	LITHONIA	LDN6 35/20-L06-AR-LSS-120-GZ1-TRW LDN6 35/20-L06-AR-LSS-120-GZ1-TRW-E10WCP
HB1	55W LED	CEILING/WALL	EMERGI-LITE	LITHONIA WSRLED-P3-40K-SR4-120
EPL	38W LED	ELEVATOR PIT	LITHONIA	LITHONIA FEM-L48-LPPFL-MD-MVOLT-GZ10-35K-80CRI-STSL-WATER TIGHT HUBS
SL	9.6	RECESSED	GOTHAM	EVO6SH-35/10-DFFAMF-SMO-120-EZ1
HD	10.4	RECESSED	LITHONIA	LDN6 40/10-L06-AR-LSS-120-D10-TRW

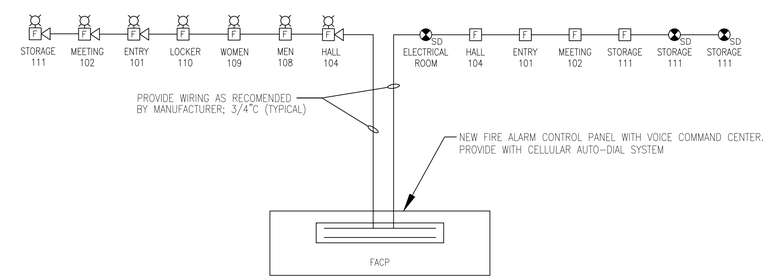

FIRE ALARM SYSTEM RISER DIAGRAM - RECREATION BLDG

NOT SO SCALE

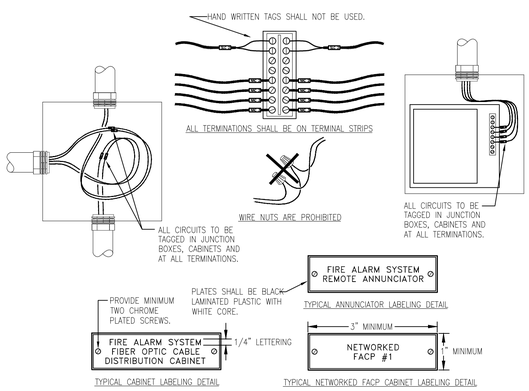

FIRE ALARM SYSTEM LABELING DETAIL

NOT TO SCALE

FIRE ALARM SYSTEM GENERAL NOTES:

a. VERIFY EXACT NUMBER OF DEVICES FROM FLOOR PLAN, NOT RISER DIAGRAM.

b. THE NAC CIRCUITS ARE SHOWN DIAGRAMMATIC. MAXIMUM NUMBER OF DEVICES ON ANY CIRCUIT IS LIMITED. PROVIDE ADDITIONAL HARDWARE AS REQUIRED.

c. SLC LOOP TO CONNECT ALL FIRE ALARM SYSTEM DEVICES FROM FLOOR PLANS. PROVIDE ADDITIONAL LOOP(S) AS REQUIRED.

d. BATTERY CABINETS AND NAC EXPANDERS SHALL BE LOCATED BELOW OR ADJACENT TO FIRE ALARM CONTROL PANEL.

e. ALL FIRE ALARM WORK SHALL BE PERFORMED BY QUALIFIED PERSONNEL AS DEFINED IN NFPA 72 (LATEST EDITION). SHOP DRAWINGS SHALL COMPLY WITH NFPA 72 SECTION.

f. SPLICING OF FIRE ALARM WIRING IS STRICTLY PROHIBITED.

g. UPON PROJECT COMPLETION THE CAMPUS WIDE FIRE ALARM SYSTEM SHALL BE RE-CERTIFIED AND TESTED. PROVIDE WITH A RECORD OF COMPLETION AS REQUIRED IN NFPA 72.

h. THE FIRE ALARM INSTALLER SHALL BE LICENSED AS A CERTIFIED FIRE ALARM CONTRACTOR. THE CONTRACTOR MUST HAVE A NICET LEVEL III TECHNICIAN IN A POSITION OF RESPONSIBILITY, AND THE LICENSE SHALL BE ISSUED IN THE NAME OF THE CERTIFICATE HOLDER AND THE CONTRACTOR. TECHNICIANS WORKING FOR THE CERTIFIED CONTRACTOR MUST HOLD A CURRENT NICET LEVEL II, OR EQUIVALENT, CERTIFICATION. CONTRACTORS WISHING TO BID ON FIRE ALARM WORK SHALL SHOW EVIDENCE AT THE PRE-BID CONFERENCE THAT HE/SHE MEETS THE CERTIFICATION REQUIREMENTS AND HOLD A PERMIT ISSUED BY THE STATE OF ALABAMA FIRE MARSHAL.

i. THE FIRE ALARM SYSTEM SHALL BE MONITORED BY AN APPROVED SUPERVISING STATION IN ACCORDANCE WITH NFPA 72. AUTOMATIC TELEPHONE DIALING DEVICES USED TO TRANSMIT AN EMERGENCY ALARM SHALL NOT BE CONNECTED TO ANY FIRE DEPARTMENT TELEPHONE NUMBER UNLESS APPROVED BY THE FIRE CHIEF.

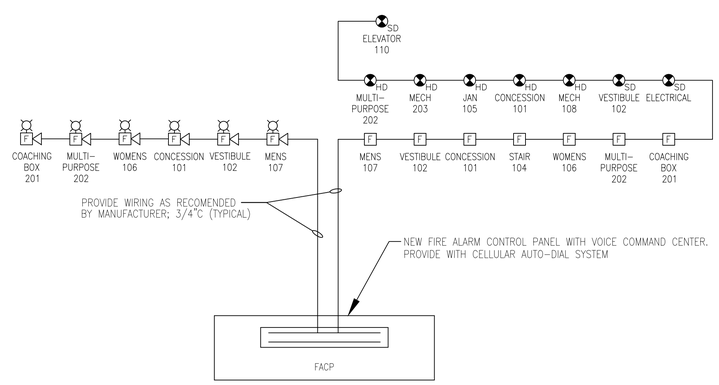

FIRE ALARM SYSTEM RISER DIAGRAM - RESTROOM BLDG

NOT SO SCALE

H.M. YONGE & ASSOCIATES, INC.
CONSULTING ENGINEERS // EST. 1988
51 EAST GREGORY STREET
PENSACOLA, FLORIDA 32502
PHONE: (850)434-2661
CERTIFICATION OF AUTHORIZATION No: 5254
MECHANICAL ENGINEER: HOWARD M. YONGE, P.E. FLORIDA REG No. 32093
MECHANICAL ENGINEER: TIMOTHY J. MITCHELL, P.E. FLORIDA REG No. 66792
ELECTRICAL ENGINEER: ARUN T. VARGHESE, P.E. FLORIDA REG No. 76315

H. M. YONGE AND ASSOC. JOB# 21-174

JENKINS ENGINEERING, INC.
121 HART STREET
NICEVILLE, FLORIDA 32578
PHONE 850.678.5141
FAX 850.729.2460
1234 AIRPORT ROAD, SUITE 126
DESTIN, FLORIDA 32541
PHONE 850.837.2448
FAX 850.837.2450
JEICIVIL.COM
C.O.A. NO. 9927

Arun T. Varghese
Digitally signed by Arun T. Varghese
Date: 2024.02.29 13:07:16 -06'00'

REV	DATE	DESCRIPTION	BY

FT WALTON BEACH PARK

HOLLYWOOD BLVD.
FT. WALTON BEACH • FLORIDA

NOT VALID UNLESS BEARING ENGINEER'S ORIGINAL SIGNATURE

JOB:
DATE: 02/29/23
DESIGNED: TAD
DRAWN: TAD

BAR IS ONE INCH ON ORIGINAL
0 1"
IF NOT ONE INCH ON THIS SHEET ADJUST SCALES ACCORDINGLY

DRAWING NUMBER

SHEET NUMBER
E0.1

File: M:\Jobs_Active\21174 Jet Drive Recreation Park\21174E01.dwg Last Saved: 2/29/2024 1:31 PM by TDoan
THIS DRAWING IS THE PROPERTY OF JENKINS ENGINEERING, INC. AND IS NOT TO BE REPRODUCED WITHOUT EXPRESSED WRITTEN CONSENT
TAD> M:\Jobs_Active\21174 Jet Drive Recreation Park\21174E10.dwg 03/02/23 10:49

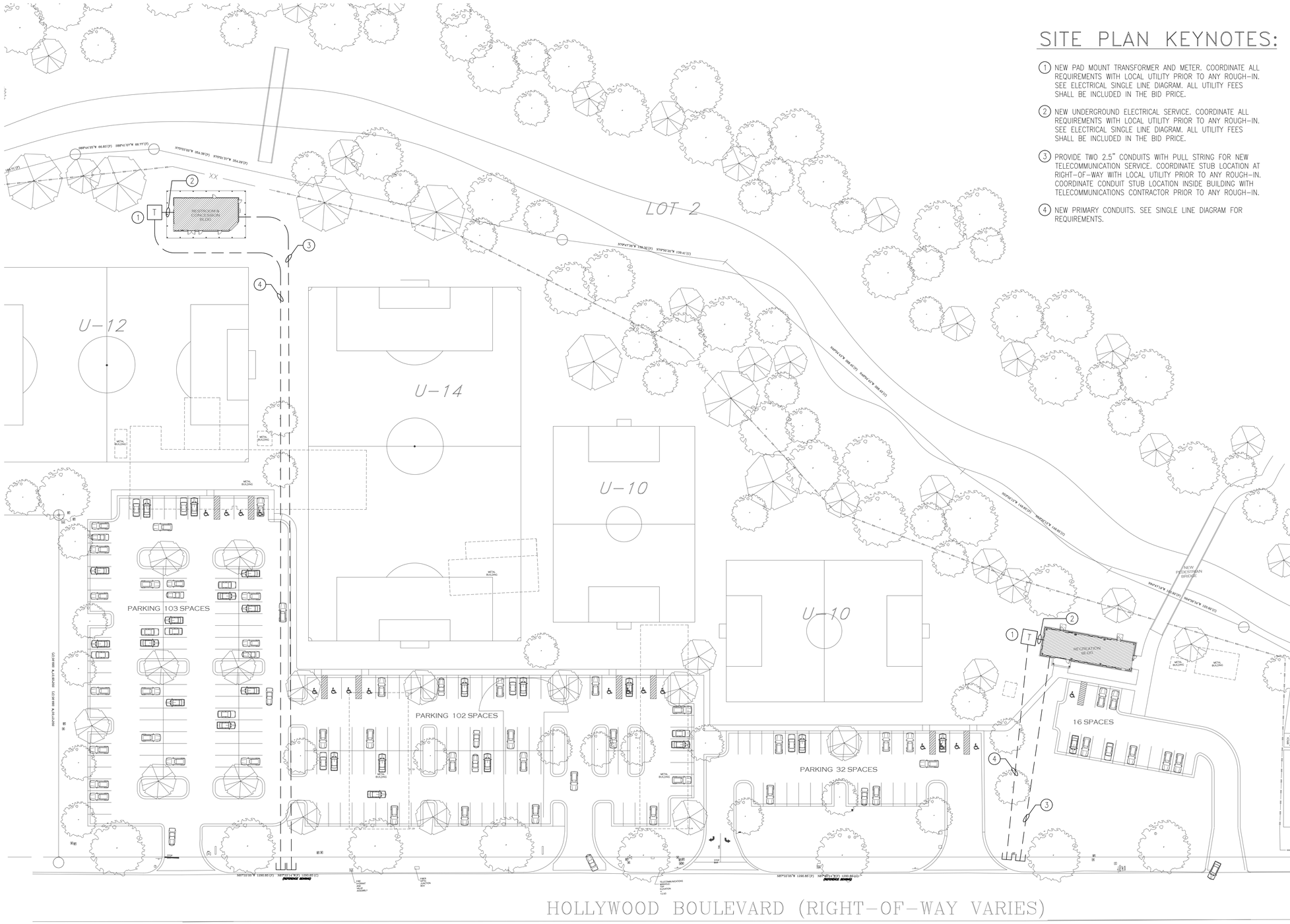

SITE PLAN KEYNOTES:

1. NEW PAD MOUNT TRANSFORMER AND METER. COORDINATE ALL REQUIREMENTS WITH LOCAL UTILITY PRIOR TO ANY ROUGH-IN. SEE ELECTRICAL SINGLE LINE DIAGRAM. ALL UTILITY FEES SHALL BE INCLUDED IN THE BID PRICE.
2. NEW UNDERGROUND ELECTRICAL SERVICE. COORDINATE ALL REQUIREMENTS WITH LOCAL UTILITY PRIOR TO ANY ROUGH-IN. SEE ELECTRICAL SINGLE LINE DIAGRAM. ALL UTILITY FEES SHALL BE INCLUDED IN THE BID PRICE.
3. PROVIDE TWO 2.5" CONDUITS WITH PULL STRING FOR NEW TELECOMMUNICATION SERVICE. COORDINATE STUB LOCATION AT RIGHT-OF-WAY WITH LOCAL UTILITY PRIOR TO ANY ROUGH-IN. COORDINATE CONDUIT STUB LOCATION INSIDE BUILDING WITH TELECOMMUNICATIONS CONTRACTOR PRIOR TO ANY ROUGH-IN.
4. NEW PRIMARY CONDUITS. SEE SINGLE LINE DIAGRAM FOR REQUIREMENTS.

1 / E1.0 — ELECTRICAL SITE PLAN

SCALE: 1" = 40'

NORTH

H.M. YONGE & ASSOCIATES, INC.
CONSULTING ENGINEERS // EST. 1988
51 EAST GREGORY STREET
PENSACOLA, FLORIDA 32502
PHONE: (850)434-2661

CERTIFICATION OF AUTHORIZATION No: 5254
MECHANICAL ENGINEER: HOWARD M. YONGE, P.E. FLORIDA REG No. 32093
MECHANICAL ENGINEER: TIMOTHY J. MITCHELL, P.E. FLORIDA REG No. 66792
ELECTRICAL ENGINEER: ARUN T. VARGHESE, P.E. FLORIDA REG No. 76315

H. M. YONGE AND ASSOC. JOB# 21-174

JENKINS ENGINEERING, INC.
121 HART STREET
NICEVILLE, FLORIDA 32578
PHONE 850.678.5141
FAX 850.729.2460
JEICIVIL.COM
C.O.A. NO. 9927

1234 AIRPORT ROAD, SUITE 126
DESTIN, FLORIDA 32541
PHONE 850.837.2448
FAX 850.837.2450

Arun T. Varghese
Digitally signed by Arun T. Varghese
Date: 2024.02.29 15:06:24 -06'00'

REV	DATE	DESCRIPTION	BY

FT WALTON BEACH PARK

HOLLYWOOD BLVD.
FT. WALTON BEACH • FLORIDA

NOT VALID UNLESS BEARING ENGINEER'S ORIGINAL SIGNATURE

JOB:
DATE: 02/29/23
DESIGNED: TAD
DRAWN: TAD

BAR IS ONE INCH ON ORIGINAL
0 1"
IF NOT ONE INCH ON THIS SHEET ADJUST SCALES ACCORDINGLY

DRAWING NUMBER

SHEET NUMBER
E1.0

THIS DRAWING IS THE PROPERTY OF JENKINS ENGINEERING, INC. AND IS NOT TO BE REPRODUCED WITHOUT EXPRESSED WRITTEN CONSENT

File: M:\Jobs_Active\21174 Jet Drive Recreation Park\21174E10.dwg - Last Saved: 2/29/2024 1:27 PM by TDean

TAD> M:\Jobs_Active\21174 Jet Drive Recreation Park\21174E10.dwg 03/02/23 10:49

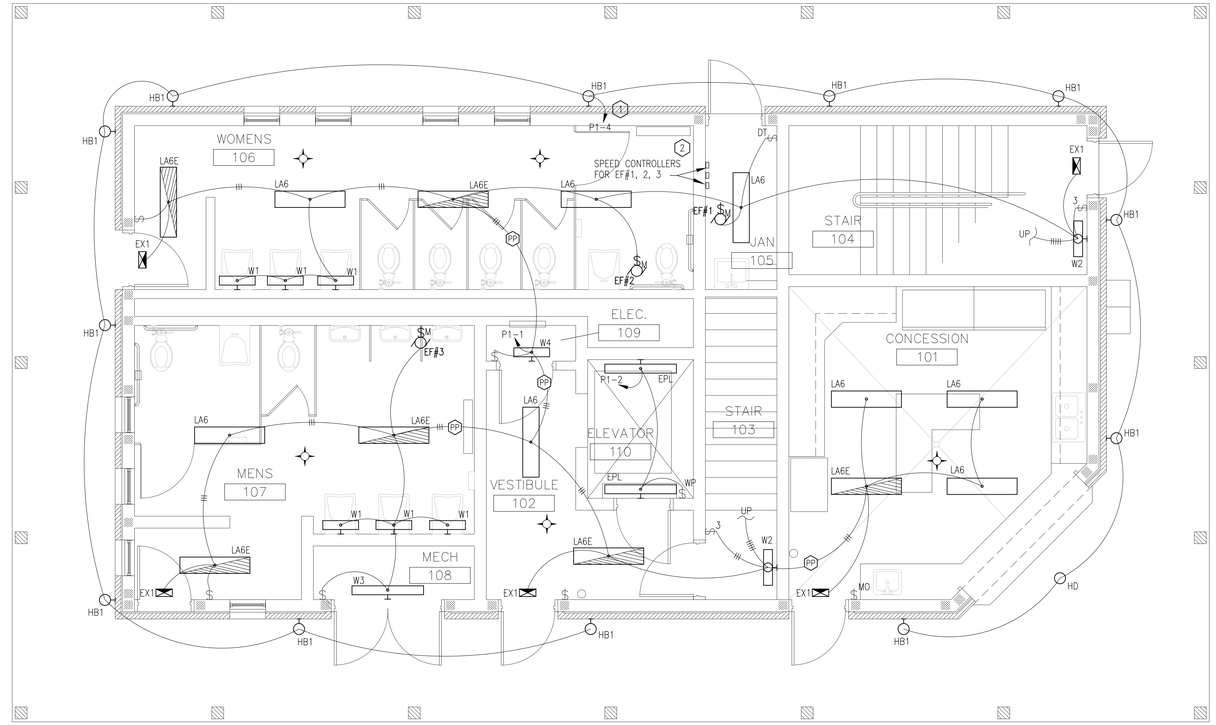

1 E2.1 NORTH

LIGHTING RESTROOM BUILDING FIRST FLOOR PLAN

SCALE: 1/4 = 1'-0"

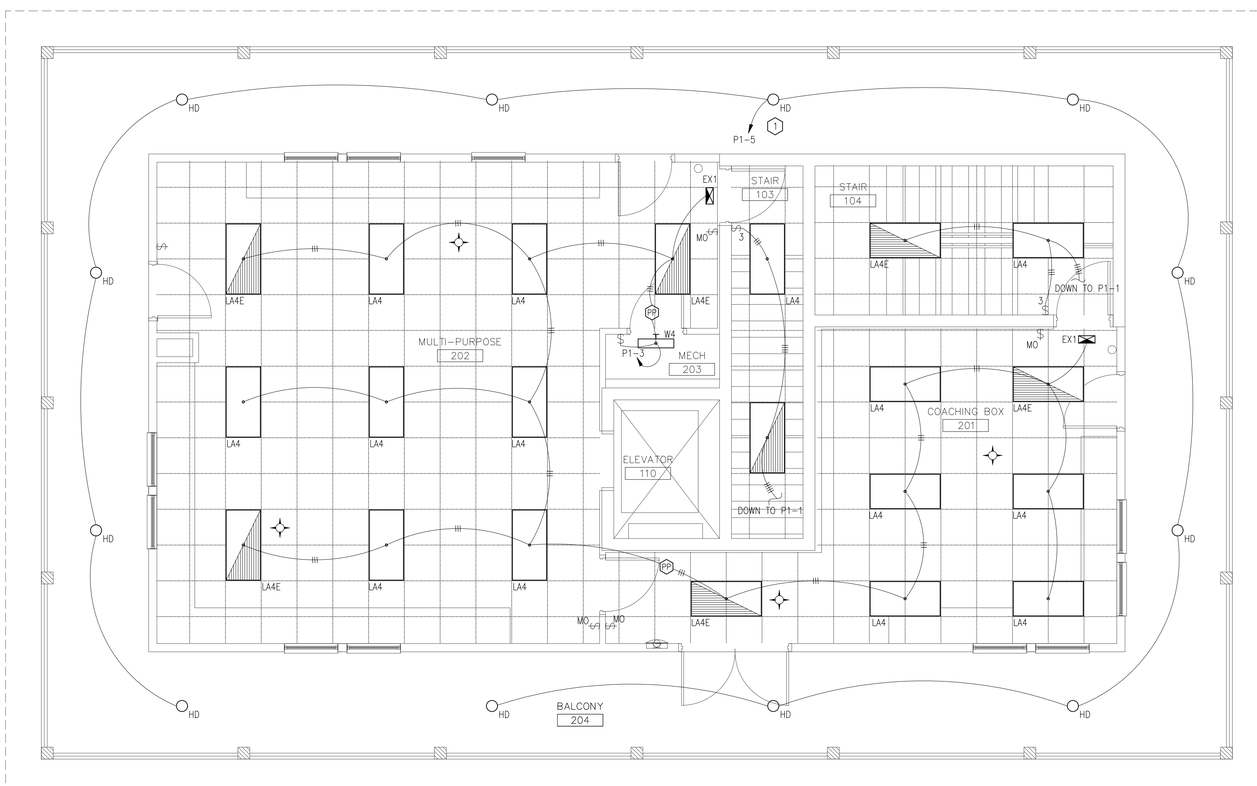

2 E2.1 NORTH

LIGHTING RESTROOM BUILDING SECOND FLOOR PLAN

SCALE: 1/4 = 1'-0"

ELECTRICAL LIGHTING KEYNOTES:

1. HOMERUN SHALL BE ROUTED THROUGH ASTRONOMIC TIME CLOCK EQUAL TO INTERMATIC ET8000. COORDINATE TIME SCHEDULE WITH OWNER. TIME CLOCK SHALL BE INSTALLED ADJACENT TO SERVING PANEL.
2. SPEED CONTROLLERS TO BE WIRED UP TO ELECTRIC FANS. COORDINATE INSTALLATION WITH MECHANICAL.

JENKINS ENGINEERING, INC.
121 HART STREET
NICEVILLE, FLORIDA 32578
PHONE 850.678.5141
FAX 850.729.2460
JEICIVIL.COM
C.O.A. NO. 9927

1234 AIRPORT ROAD, SUITE 126
DESTIN, FLORIDA 32541
PHONE 850.837.2448
FAX 850.837.2450

Arun T. Varghese
Digitally signed by Arun T. Varghese
Date: 2024.02.29 15:06:36 -06'00'
No. 76315
STATE OF FLORIDA
PROFESSIONAL ENGINEER

REV	DATE	DESCRIPTION	BY

FT WALTON BEACH PARK

HOLLYWOOD BLVD.
FT. WALTON BEACH • FLORIDA

NOT VALID UNLESS BEARING ENGINEER'S ORIGINAL SIGNATURE

JOB:
DATE: 02/29/23
DESIGNED: TAD
DRAWN: TAD

BAR IS ONE INCH ON ORIGINAL
0 — 1"
IF NOT ONE INCH ON THIS SHEET ADJUST SCALES ACCORDINGLY

DRAWING NUMBER

SHEET NUMBER
E2.1

H.M. YONGE & ASSOCIATES, INC.
CONSULTING ENGINEERS // EST. 1988
51 EAST GREGORY STREET
PENSACOLA, FLORIDA 32502
PHONE: (850)434-2661
CERTIFICATION OF AUTHORIZATION No: 5254
MECHANICAL ENGINEER: HOWARD M. YONGE, P.E. FLORIDA REG No. 32093
MECHANICAL ENGINEER: TIMOTHY J. MITCHELL, P.E. FLORIDA REG No. 66792
ELECTRICAL ENGINEER: ARUN T. VARGHESE, P.E. FLORIDA REG No. 76315

H. M. YONGE AND ASSOC. JOB# 21-174

THIS DRAWING IS THE PROPERTY OF JENKINS ENGINEERING, INC. AND IS NOT TO BE REPRODUCED WITHOUT EXPRESSED WRITTEN CONSENT

TAD> M:\Jobs_Active\21174 Jet Drive Recreation Park\21174E10.dwg 03/02/23 10:49

File: M:\Jobs_Active\21174-Jet Drive Recreation Park\21174E21.dwg - Last Saved: 2/29/2024 1:27 PM by TDoan

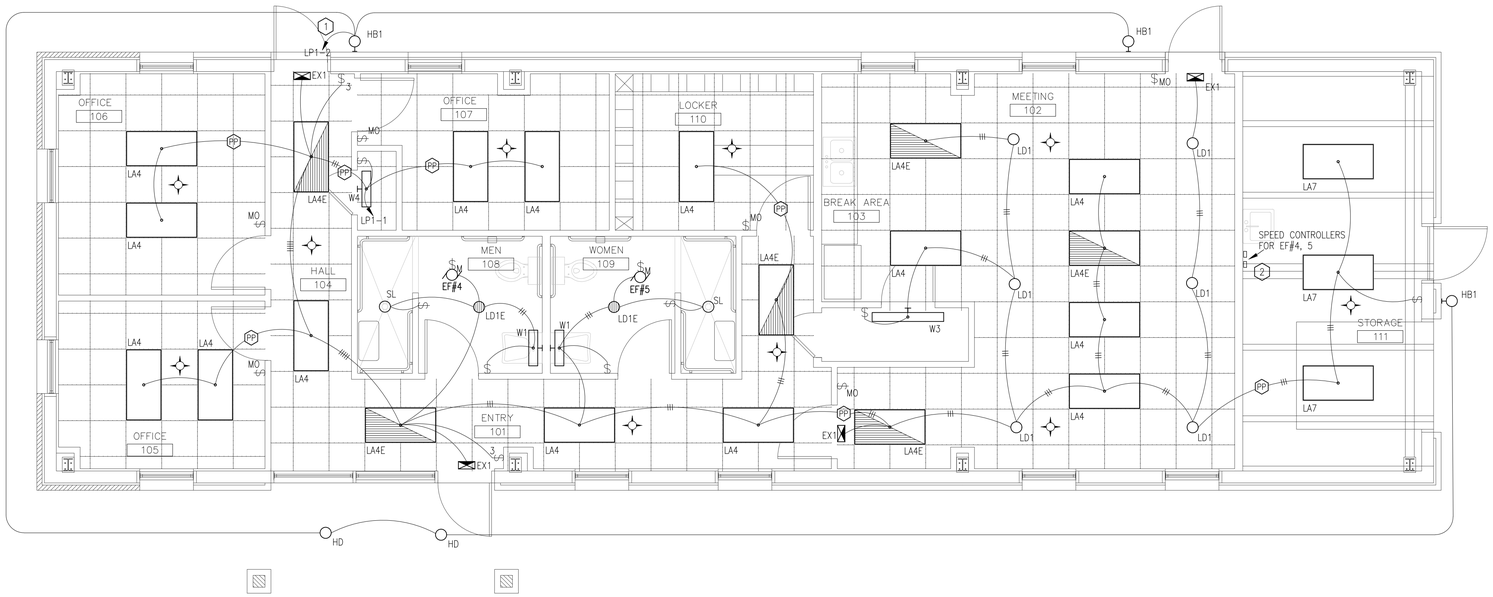

1
E2.2

NORTH

LIGHTING RECREATION BUILDING PLAN

SCALE: 1/4 = 1'-0"

ELECTRICAL LIGHTING KEYNOTES:

1. HOMERUN SHALL BE ROUTED THROUGH ASTRONOMIC TIME CLOCK EQUAL TO INTERMATIC ET8000. COORDINATE TIME SCHEDULE WITH OWNER. TIME CLOCK SHALL BE INSTALLED ADJACENT TO SERVING PANEL.
2. SPEED CONTROLLERS TO BE WIRED UP TO ELECTRIC FANS. COORDINATE INSTALLATION WITH MECHANICAL.

JENKINS ENGINEERING, INC.
121 HART STREET
NICEVILLE, FLORIDA 32578
PHONE 850.678.5141
FAX 850.729.2460
1234 AIRPORT ROAD, SUITE 126
DESTIN, FLORIDA 32541
PHONE 850.837.2448
FAX 850.837.2450
JEICIVIL.COM
C.O.A. NO. 9927

Arun T Varghese
Digitally signed by Arun T Varghese
Date: 2024.02.29 15:06:18 -06'00'

REV	DATE	DESCRIPTION	BY

FT WALTON BEACH PARK

HOLLYWOOD BLVD.
FT. WALTON BEACH • FLORIDA

NOT VALID UNLESS BEARING ENGINEER'S ORIGINAL SIGNATURE

JOB:
DATE: 02/29/23
DESIGNED: TAD
DRAWN: TAD

BAR IS ONE INCH ON ORIGINAL
0 1"
IF NOT ONE INCH ON THIS SHEET ADJUST SCALES ACCORDINGLY

DRAWING NUMBER

SHEET NUMBER
E2.2

H.M. YONGE & ASSOCIATES, INC.
CONSULTING ENGINEERS // EST. 1988
51 EAST GREGORY STREET
PENSACOLA, FLORIDA 32502
PHONE: (850)434-2661
CERTIFICATION OF AUTHORIZATION No: 5254
MECHANICAL ENGINEER: HOWARD M. YONGE, P.E. FLORIDA REG No. 32093
MECHANICAL ENGINEER: TIMOTHY J. MITCHELL, P.E. FLORIDA REG No. 66792
ELECTRICAL ENGINEER: ARUN T. VARGHESE, P.E. FLORIDA REG No. 76315

H. M. YONGE AND ASSOC. JOB# 21-174

THIS DRAWING IS THE PROPERTY OF JENKINS ENGINEERING, INC. AND IS NOT TO BE REPRODUCED WITHOUT EXPRESSED WRITTEN CONSENT

TAD> M:\Jobs_Active\21174 Jet Drive Recreation Park\21174E22.dwg 03/02/23 11:28

File: M:\Jobs_Active\21174 Jet Drive Recreation Park\21174E22.dwg - Last Saved: 2/29/2024 1:27 PM by TDean

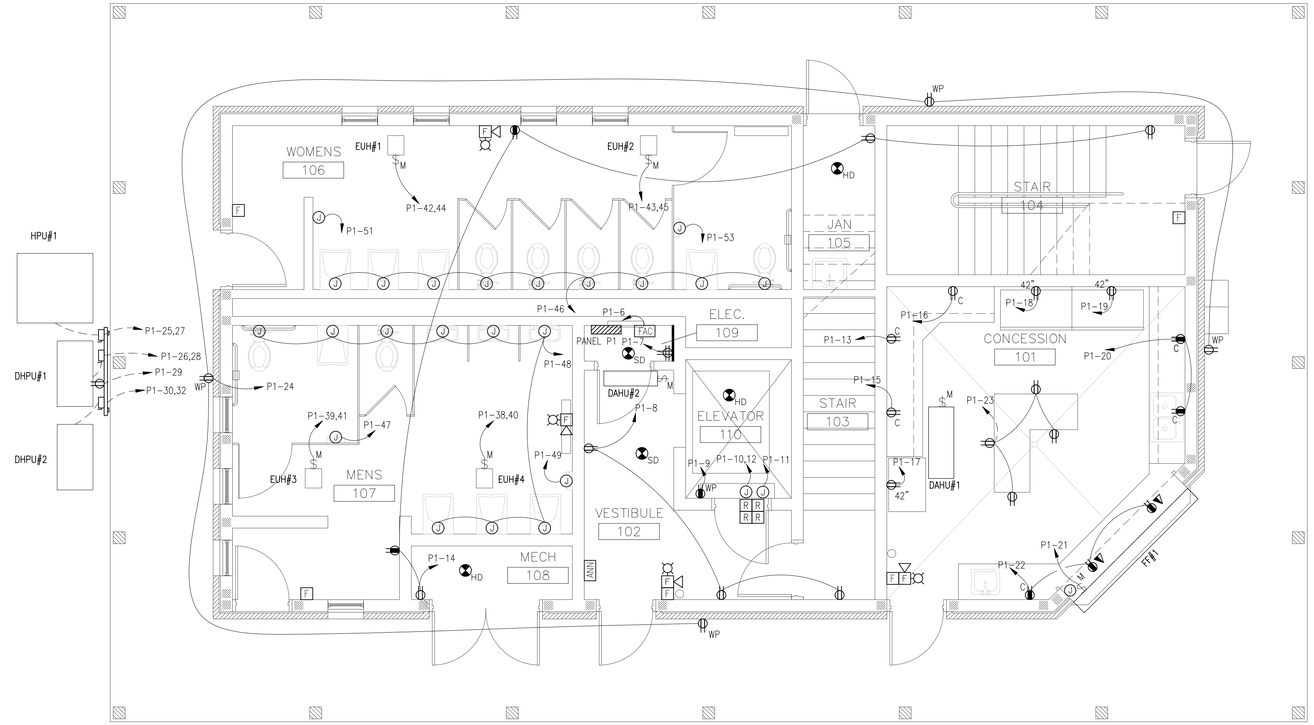

1 E3.1

NORTH

ELECTRICAL RESTROOM BUILDING FIRST FLOOR PLAN

SCALE: 1/4 = 1'-0"

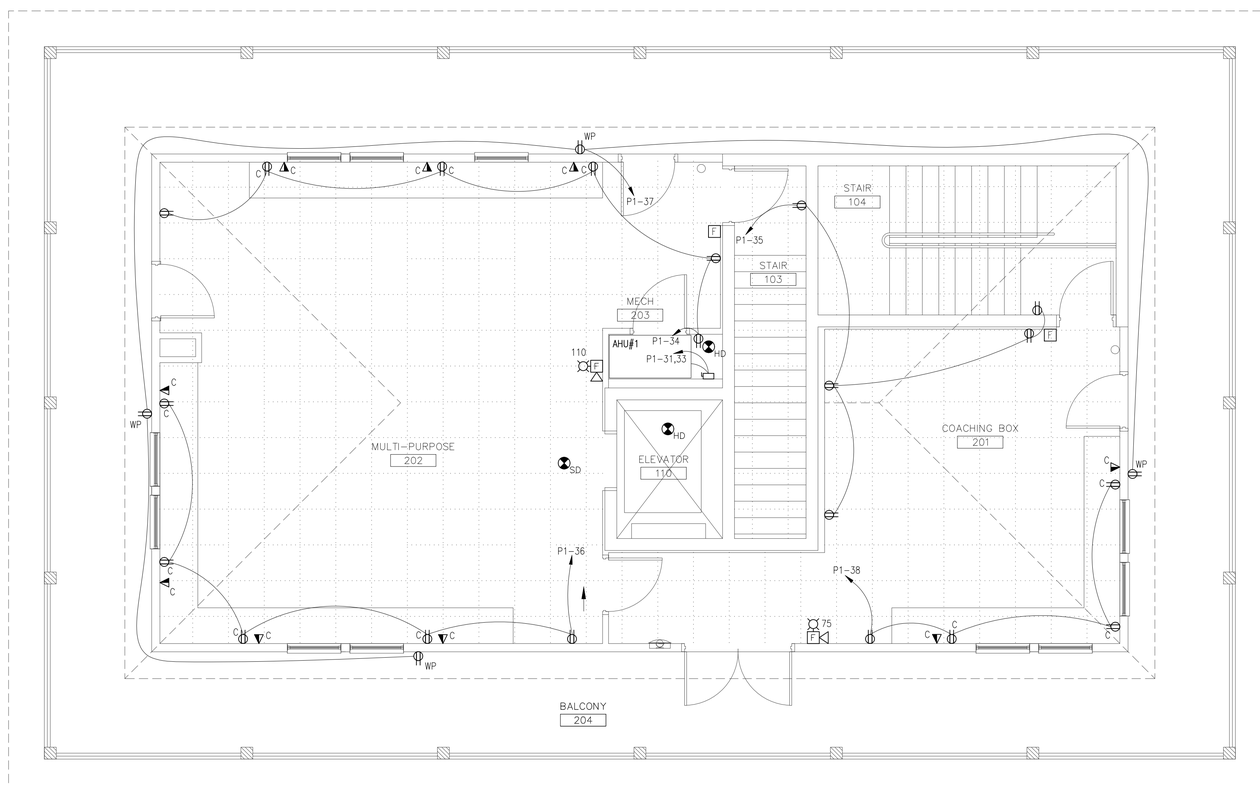

2 E3.1

NORTH

ELECTRICAL RESTROOM BUILDING SECOND FLOOR PLAN

SCALE: 1/4 = 1'-0"

JENKINS ENGINEERING, INC.
121 HART STREET
NICEVILLE, FLORIDA 32578
PHONE 850.678.5141
FAX 850.729.2460
JEICIVIL.COM
C.O.A. NO. 9927

1234 AIRPORT ROAD, SUITE 126
DESTIN, FLORIDA 32541
PHONE 850.837.2448
FAX 850.837.2450

ARUN THOMAS VARGHESE
LICENSE
No. 76315
STATE OF FLORIDA
PROFESSIONAL ENGINEER

REV	DATE	DESCRIPTION	BY

FT WALTON BEACH PARK

HOLLYWOOD BLVD.

FT. WALTON BEACH • FLORIDA

NOT VALID UNLESS BEARING ENGINEER'S ORIGINAL SIGNATURE

JOB:
DATE: 02/29/23
DESIGNED: TAD
DRAWN: TAD

BAR IS ONE INCH ON ORIGINAL
0 1"
IF NOT ONE INCH ON THIS SHEET ADJUST SCALES ACCORDINGLY

DRAWING NUMBER

SHEET NUMBER
E3.1

H.M. YONGE & ASSOCIATES, INC.
CONSULTING ENGINEERS // EST. 1988
51 EAST GREGORY STREET
PENSACOLA, FLORIDA 32502
PHONE: (850)434-2661
CERTIFICATION OF AUTHORIZATION No: 5254
MECHANICAL ENGINEER: HOWARD M. YONGE, P.E. FLORIDA REG No. 32093
MECHANICAL ENGINEER: TIMOTHY J. MITCHELL, P.E. FLORIDA REG No. 66792
ELECTRICAL ENGINEER: ARUN T. VARGHESE, P.E. FLORIDA REG No. 76315

H. M. YONGE AND ASSOC. JOB# 21-174

THIS DRAWING IS THE PROPERTY OF JENKINS ENGINEERING, INC. AND IS NOT TO BE REPRODUCED WITHOUT EXPRESSED WRITTEN CONSENT

TAD> M:\Jobs_Active\21174 Jet Drive Recreation Park\21174E10.dwg 03/02/23 10:49

File: M:\Jobs_Active\21174-Jet Drive Recreation Park\21174E31.dwg - Last Saved: 2/29/2024 1:27 PM by TDoan

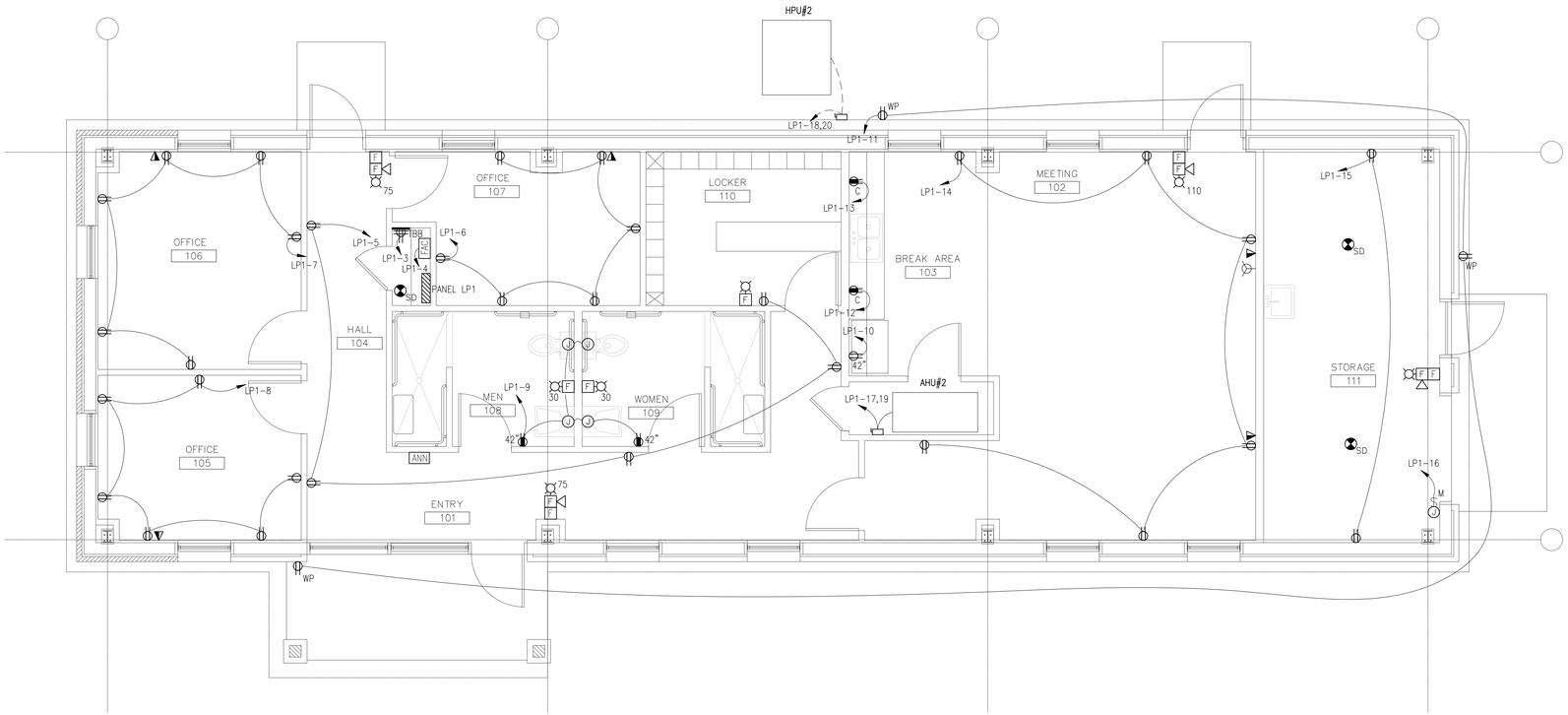

1
E3.2

NORTH

ELECTRICAL RECREATION BUILDING PLAN

SCALE: 1/4 = 1'-0"

JENKINS ENGINEERING, INC.
121 HART STREET
NICEVILLE, FLORIDA 32578
PHONE 850.678.5141
FAX 850.729.2460

1234 AIRPORT ROAD, SUITE 126
DESTIN, FLORIDA 32541
PHONE 850.837.2448
FAX 850.837.2450

JEICIVIL.COM
C.O.A. NO. 9927

ARUN THOMAS VARGHESE
LICENSE
No. 76315
STATE OF FLORIDA
PROFESSIONAL ENGINEER

REV	DATE	DESCRIPTION	BY

FT WALTON BEACH PARK

HOLLYWOOD BLVD.
FT. WALTON BEACH • FLORIDA

NOT VALID UNLESS BEARING ENGINEER'S ORIGINAL SIGNATURE

JOB:
DATE: 02/29/23
DESIGNED: TAD
DRAWN: TAD

BAR IS ONE INCH ON ORIGINAL
0 1"
IF NOT ONE INCH ON THIS SHEET
ADJUST SCALES ACCORDINGLY

DRAWING NUMBER

SHEET NUMBER
E3.2

H.M. YONGE & ASSOCIATES, INC.
CONSULTING ENGINEERS // EST. 1988
51 EAST GREGORY STREET
PENSACOLA, FLORIDA 32502
PHONE: (850)434-2661

CERTIFICATION OF AUTHORIZATION No: 5254
MECHANICAL ENGINEER: HOWARD M. YONGE, P.E. FLORIDA REG No. 32093
MECHANICAL ENGINEER: TIMOTHY J. MITCHELL, P.E. FLORIDA REG No. 66792
ELECTRICAL ENGINEER: ARUN T. VARGHESE, P.E. FLORIDA REG No. 76315

H. M. YONGE AND ASSOC. JOB# 21-174

THIS DRAWING IS THE PROPERTY OF JENKINS ENGINEERING, INC. AND IS NOT TO BE REPRODUCED WITHOUT EXPRESSED WRITTEN CONSENT

TAD> M:\Jobs_Active\21174 Jet Drive Recreation Park\21174E10.dwg 03/02/23 10:49

File: M:\Jobs_Active\21174 Jet Drive Recreation Park\21174E32.dwg - Last Saved: 2/29/2024 1:27 PM by TDean

MECHANICAL EQUIPMENT ELECTRICAL SCHEDULE

MARK	TYPE OF EQUIPMENT	VOLTAGE	MCA	MOCP	FEEDER	PANEL/CIRCUIT	DISCONNECT	NOTES
EF#1	ELECTRIC FAN	120	5.5	15	2#12, 1#12G, 0.5"C	P1-1	20A/1P	·
EF#2	ELECTRIC FAN	120	5.5	15	2#12, 1#12G, 0.5"C	P1-1	20A/1P	·
EF#3	ELECTRIC FAN	120	5.5	15	2#12, 1#12G, 0.5"C	P1-1	20A/1P	·
EF#4	ELECTRIC FAN	120	5.5	15	2#12, 1#12G, 0.5"C	LP1-1	20A/1P	·
EF#5	ELECTRIC FAN	120	5.5	15	2#12, 1#12G, 0.5"C	LP1-1	20A/1P	·
FF#1	FLY FAN	120	9.9	15	2#12, 1#12G, 0.5"C	P1-21	20A/1P	·
EUH#1	ELECTRIC UNIT HEATER	240	10.4	15	3#12, 1#12G, 0.5"C	P1-38,40	20A/1P	·
EUH#2	ELECTRIC UNIT HEATER	240	10.4	15	3#12, 1#12G, 0.5"C	P1-39,41	20A/1P	·
EUH#3	ELECTRIC UNIT HEATER	240	10.4	15	3#12, 1#12G, 0.5"C	P1-42,44	20A/1P	·
EUH#4	ELECTRIC UNIT HEATER	240	10.4	15	3#12, 1#12G, 0.5"C	P1-43,45	20A/1P	·
DAHU#1	DUCTLESS AIR HANDLING UNIT	240	·	·	·	·	·	4
DAHU#2	DUCTLESS AIR HANDLING UNIT	240	·	·	·	·	·	4
DHPU#1	DUCLTESS HEAT PUMP UNIT	240	9	15	3#12, 1#12G, 0.5"C	P1-26,28	30/2P	1
DHPU#2	DUCLTESS HEAT PUMP UNIT	240	10	15	3#12, 1#12G, 0.5"C	P1-30,32	30/2P	1
AHU#1	AIR HANDLING UNIT	240	45	45	3#8, 1#10G, 0.75"C	P1-31,33	60A/2P	1
AHU#2	AIR HANDLING UNIT	240	60	60	3#6, 1#10G, 1"C	LP1-17,19	60A/2P	1
HPU#1	HEAT PUMP UNIT	240	24	40	3#8, 1#10G, 0.75"C	P1-25,27	60A/2P	1
HPU#2	HEAT PUMP UNIT	240	32	50	3#8, 1#10G, 0.75"C	LP1-18,20	60A/2P	1

N3R – NEMA 3R

NOTES:
1. COORDINATE WITH THE MECHANICAL CONTRACTOR TO ENSURE ALL DISCONNECTS AND/OR VFD'S ARE PROVIDED AS REQUIRED.
2. PROVIDED WITH INTEGRAL DISCONNECT.
3. FIELD VERIFY SERVING PANEL LOCATION. SEE FLOOR PLAN.
4. INDOOR UNIT IS FED FROM OUTDOOR UNIT.

THE ELECTRICAL CONTRACTOR SHALL FIELD MARK ALL ELECTRICAL SERVICE EQUIPMENT WITH A CONSPICUOUS AND PERMANENT LABEL THAT INDICATES THE AVAILABLE FAULT CURRENT AS FOLLOWS PER NEC 110.24:

"Panel XX"
"Maximum available fault current = ##,### Amps"
"Month DD, Year"

THE LABEL SHOULD BE OF SUFFICIENT DURABILITY TO WITHSTAND THE ENVIRONMENT INVOLVED.

THE ELECTRICAL CONTRACTOR SHALL FIELD MARK ALL PANEL BOARDS IN AREA OF WORK THAT ARE TO REMAIN TO INDICATE ORIGIN OF POWER SUPPLY.

NOTE: ALL EQUIPMENT THAT IS LIKELY TO REQUIRE EXAMINATION, ADJUSTMENT, SERVICING, OR MAINTENANCE WHILE ENERGIZED SHALL BE PROVIDED WITH A LABEL IN ACCORDANCE WITH NEC 110.16. THE EQUIPMENT MANUFACTURER SHALL PROVIDE AN ARC FLASH HAZARD ANALYSIS TO DETERMINE THE LEVEL OF PERSONAL PROTECTIVE EQUIPMENT (PPE) REQUIRED FOR EACH PIECE OF EQUIPMENT. LABEL SHALL INCLUDE:

1. AT LEAST ONE OF THE FOLLOWING:
   A. AVAILABLE INCIDENT ENERGY AND THE CORRESPONDING WORKING DISTANCE
   B. MINIMUM ARC RATING OF CLOTHING
   C. REQUIRED LEVEL OF PPE
   D. HIGHEST HAZARD/RISK CATEGORY (HRC) FOR THE EQUIPMENT
2. NOMINAL SYSTEM VOLTAGE
3. ARC FLASH BOUNDARY

ELECTRICAL CONTRACTOR SHALL COORDINATE WITH MECHANICAL CONTRACTOR TO ENSURE THE OVER CURRENT PROTECTION FOR THE SPECIFIC HVAC EQUIPMENT MEETS THE MANUFACTURER AND THE NATIONAL ELECTRICAL CODE REQUIREMENTS.

THE ELECTRICAL CONTRACTOR SHALL FIELD MARK ALL PANEL BOARDS WITH ORIGIN OF POWER SUPPLY. VIA MECHANICALLY FASTENED PHENOLIC LABEL.

PANEL P1 SCHEDULE
RESTROOM BLDG

NEMA 1, SURFACE MOUNT
400A M.C.B. 240/120V 1ø 3W

19,312 SCA RATING
22,000 AIC RATING

CKT NO.	LOAD DESCRIPTION	BREAKER POLE	BREAKER AMP	KVA		BREAKER AMP	BREAKER POLE	LOAD DESCRIPTION	CKT NO.
1	FIRST FLOOR LIGHTS	1	20	1.0	0.1	20	1	ELEVATOR PIT LIGHTS	2
3	SECOND FLOOR LIGHTS	1	20	0.6	0.7	20	1	FIRST FLOOR OUTSIDE LIGHTS	4
5	SECOND FLOOR OUTSIDE LIGHTS	1	20	0.2	0.5	20	1	FIRE ALARM CONTROL (R)	6
7	TELEPHONE BACKBOARD	1	20	1.0	0.6	20	1	VESTIBULE 102, STAIR 103	8
9	ELEVATOR PIT REC	1	20	0.2	22.5	200	2	ELEVATOR MOTOR	10
11	ELEVATOR CAB	1	20	0.5					12
13	CONCESSION COUNTER WEST 1 REC (G)	1	20	1.0	1.0	20	1	MENS, MECH, WOMENS, JAN, STAIR	14
15	CONCESSION COUNTER WEST 2 REC (G)	1	20	1.0	1.0	20	1	CONCESSION COUNTER NORTH REC (G)	16
17	REFRIGERATOR WEST (G)	1	20	0.8	1.0	20	1	REFRIGERATOR NORTH 1 (G)	18
19	REFRIGERATOR NORTH 2 (G)	1	20	1.0	0.8	20	1	CONCESSION COUNTER EAST (G)	20
21	FF#1 (G)	1	20	0.9	0.8	20	1	CONCESSION COUNTER SOUTH (G)	22
23	CONCESSION ISLAND (G)	1	20	0.8	0.8	20	1	OUTSIDE REC	24
25	HPU#1	2	40	4.7	1.8	20	2	DHPU#1	26
27									28
29	MECHANICAL REC	1	20	0.2	1.8	20	2	DPHU#2	30
31	AHU#1	2	45	8.9					32
33					1.8	20	1	MECH 203, MULTI-PURPOSE 202	34
35	STAIR 103, 104, COACHING BOX 201	1	20	1.0	1.0	20	1	MULTI-PURPOSE 202	36
37	OUTSIDE SECOND FLOOR REC	1	20	0.8	2.0	20	2	EUH#1	38
39	EUH#2	2	20	2.0					40
41					2.0	20	2	EUH#3	42
43	EUH#4	2	20	2.0					44
45					1.0	20	1	MENS SENSOR FAUCETS	46
47	MEN HAND DRYER	1	20	1.8	1.0	20	1	WOMENS SENSOR FAUCETS	48
49	MEN HAND DRYER	1	20	1.8	·	20	1	SPARE	50
51	WOMEN HAND DRYER	1	20	1.8	·	20	1	SPARE	52
53	WOMEN HAND DRYER	1	20	1.8	·	20	1	SPARE	54
55	SPARE	1	20	·	·	20	1	SPARE	56
57	SPARE	1	20	·	·	20	1	SPARE	58
59	SPACE	1	·	·	·	·	1	SPACE	60
61	SPACE	1	·	·	·	·	1	SPACE	62
63	SPACE	1	·	·	·	·	1	SPACE	64
65	SPACE	1	·	·	·	·	1	SPACE	66
67	SPACE	1	·	·	·	·	1	SPACE	68
69	SPACE	1	·	·	·	·	1	SPACE	70
71	SPACE	1	·	·	·	·	1	SPACE	72

CONNECTED LOAD 78.0 KVA

(R) – PROVIDED LOCKABLE BREAKER
(G) – INDICATES GFCI BREAKER

PANEL LP1 SCHEDULE
RECREATION BLDG

NEMA 1, SURFACE MOUNT
200A M.C.B. 240/120V 1ø 3W

16,253 SCA RATING
22,000 AIC RATING

CKT NO.	LOAD DESCRIPTION	BREAKER POLE	BREAKER AMP	KVA		BREAKER AMP	BREAKER POLE	LOAD DESCRIPTION	CKT NO.
1	INSIDE LIGHTS	1	20	1.0	0.1	20	1	OUTSIDE LIGHTS	2
3	TELEPHONE BACKBOARD	1	20	1.0	0.5	20	1	FIRE ALARM CONTROL (R)	4
5	HALL 104, ENTRY 101, LOCKER 110	1	20	1.0	1.2	20	1	OFFICE 107	6
7	OFFICE 106	1	20	1.2	1.2	20	1	OFFICE 105	8
9	MEN 108, WOMEN 109	1	20	0.4	0.8	20	1	REFRIGERATOR 103	10
11	OUTSIDE REC	1	20	0.6	1.0	20	1	BREAK AREA COUNTER 103	12
13	BREAK AREA COUNTER 103	1	20	1.0	1.2	20	1	MEETING 102	14
15	STORAGE 111	1	20	0.4	0.4	20	1	ROLL UP DOOR	16
17	AHU#2	2	60	11.6	6.4	50	2	HPU#2	18
19									20
21	SPARE	1	20	·	·	20	1	SPARE	22
23	SPARE	1	20	·	·	20	1	SPARE	24
25	SPARE	1	20	·	·	20	1	SPARE	26
27	SPARE	1	20	·	·	20	1	SPARE	28
29	SPACE	1	·	·	·	·	1	SPACE	30
31	SPACE	1	·	·	·	·	1	SPACE	32
33	SPACE	1	·	·	·	·	1	SPACE	34
35	SPACE	1	·	·	·	·	1	SPACE	36
37	SPACE	1	·	·	·	·	1	SPACE	38
39	SPACE	1	·	·	·	·	1	SPACE	40
41	SPACE	1	·	·	·	·	1	SPACE	42

CONNECTED LOAD 31.0 KVA

(R) – PROVIDED LOCKABLE BREAKER

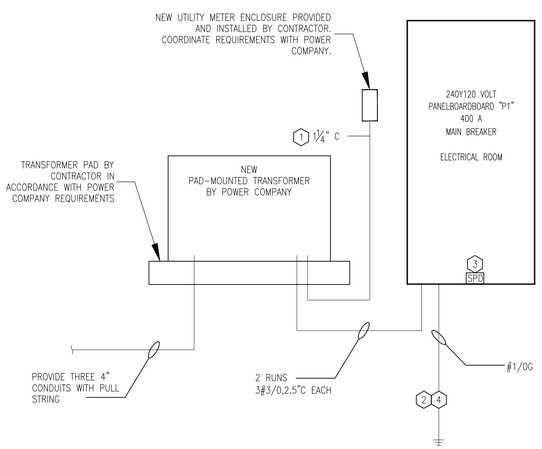

SINGLE LINE DIAGRAM - RESTROOM BLDG
NOT SO SCALE

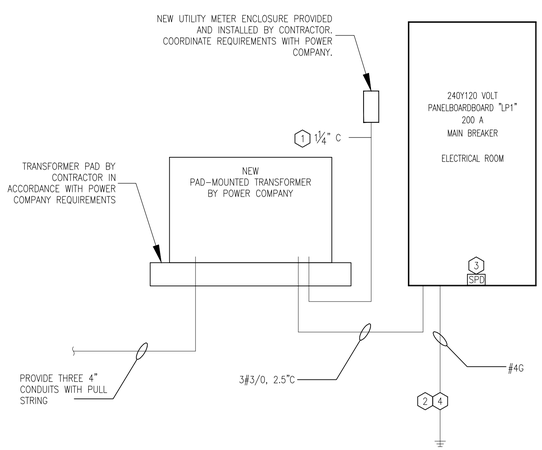

SINGLE LINE DIAGRAM - RECREATION BLDG
NOT SO SCALE

ELECTRICAL SPECIFICATIONS:

1. ALL ELECTRICAL WORK SHALL BE IN CONFORMANCE WITH THE NATIONAL ELECTRICAL CODE AND LOCAL CODES AND ORDINANCES.
2. ALL WIRING SHALL BE COPPER CONDUCTORS WITH TYPE THHN OR TYPE THW INSULATION RUN IN CONDUIT. PROVIDE INDIVIDUAL NEUTRAL CONDUCTORS FOR ALL SINGLE-POLE BRANCH CIRCUITS. TIED BREAKER HANDLES ARE NOT ACCEPTABLE.
3. ALL MATERIALS SHALL BE NEW AND UL LISTED FOR THE APPLICATION.
4. PROVIDE TYPED PANELBOARD SCHEDULES IN ALL PANELBOARDS.
5. CONDUITS RUN CONCEALED IN THE HOLLOW SPACE OF NON-MASONRY WALLS OR ABOVE SUSPENDED CEILING SHALL BE EMT. FLEX SHALL NOT BE PERMITTED. EXPOSED CONDUITS SHALL BE RUN AT RIGHT ANGLES OR PARALLEL WITH BUILDING LINES AND EXPOSED STRUCTURE. IN ALL CASES, CONDUIT SHALL BE GROUPED TOGETHER WHERE POSSIBLE AND SHALL BE SUPPORTED FROM THE BUILDING STRUCTURE, NOT FOR ANY SUSPENDED CEILING SUPPORT SYSTEM.
6. CONDUITS USED FOR CONNECTION TO RECESSED LIGHTING FIXTURES SHALL BE FLEX NOT OVER 5 FEET IN TOTAL LENGTH. CONDUITS FOR CONNECTION TO MOTORS OR VIBRATING EQUIPMENT SHALL BE LQFLEX NOT LESS THAN 18" LONG AND NOT OVER 60" LONG.
7. LIGHTING FIXTURES SHALL BE INSTALLED PLUMB, SQUARE, AND LEVEL WITH THE CEILING, WALL, AND IN ALIGNMENT WITH ADJACENT LIGHTING FIXTURES. MOUNTING HEIGHTS INDICATED SHALL BE TO THE BOTTOM OF THE FIXTURE FOR CEILING-MOUNTED FIXTURES AND TO CENTER OF FIXTURE FOR WALL-MOUNTED FIXTURES. LAY-IN TROFFER FIXTURES SHALL BE SUPPORTED WITH A MINIMUM OF 4 CEILING SUPPORT WIRES PER FIXTURE AND NOT MORE THAN 6 INCHES FROM EACH CORNER OF THE FIXTURE. FOR FIXTURES SMALLER IN SIZE THAN THE CEILING GRID, PROVIDE A MINIMUM OF 4 WIRES PER FIXTURE. DO NOT SUPPORT FIXTURES BY CEILING ACOUSTICAL PANELS. ALL CONCEALED FIXTURE MOUNTING ACCESSORIES SHALL BE SECURELY TIED TO STRUCTURE. FLEXIBLE CONNECTIONS TO FIXTURES SHALL NOT EXCEED 6 FEET IN LENGTH. FIXTURES SHALL BE SOLIDLY GROUNDED TO RACEWAY SYSTEM.

SINGLE LINE DIAGRAM KEYNOTES:

1. 1 1/4" CONDUIT WITH PULL STRING. THE ELECTRICAL CONTRACTOR SHALL COORDINATE WITH THE UTILITY AND FURNISH METERING COMPONENTS AS REQUIRED.
2. GROUNDING ELECTRODE SYSTEM SHALL BE IN ACCORDANCE WITH NEC 2020 ARTICLE 250.
3. PROVIDE EXTERNAL, SERVICE ENTRANCE RATED, CATEGORY-C SURGE PROTECTION DEVICE, 10-MODE, 240ka PER PHASE.
4. PROVIDE TWO COPPER GLAD 3/4"X10' GROUND RODS SPACED 10FT APART. PROVIDE HIGH COMPRESSION DIRECT BURIAL HYGROUND CONNECTORS. THE GROUNDING ELECTRODE SYSTEM SHALL BE INSTALLED IN ACCORDANCE WITH NEC ARTICLE #250.50. BOND TO BUILDING STEEL, GAS PIPING, WATER PIPING, AND REBAR SYSTEMS.

H.M. YONGE & ASSOCIATES, INC.
CONSULTING ENGINEERS // EST. 1988
51 EAST GREGORY STREET
PENSACOLA, FLORIDA 32502
PHONE: (850)434-2661
CERTIFICATION OF AUTHORIZATION No. 5254
MECHANICAL ENGINEER: HOWARD M. YONGE, P.E. FLORIDA REG No. 32093
MECHANICAL ENGINEER: TIMOTHY J. MITCHELL, P.E. FLORIDA REG No. 66392
ELECTRICAL ENGINEER: ARUN T. VARGHESE, P.E. FLORIDA REG No. 76315

H. M. YONGE AND ASSOC. JOB# 21-174

JENKINS ENGINEERING, INC.
1234 AIRPORT ROAD, SUITE 126
DESTIN, FLORIDA 32541
PHONE 850.837.2448
FAX 850.837.2450
121 HART STREET
NICEVILLE, FLORIDA 32578
PHONE 850.678.5141
FAX 850.729.2460
JEICIVIL.COM
C.O.A. NO. 9927

ARUN THOMAS VARGHESE
LICENSE
No. 76315
STATE OF FLORIDA
PROFESSIONAL ENGINEER

REV	DATE	DESCRIPTION	BY

FT WALTON BEACH PARK
HOLLYWOOD BLVD.
FT. WALTON BEACH • FLORIDA

NOT VALID UNLESS BEARING ENGINEER'S ORIGINAL SIGNATURE

JOB:
DATE: 02/29/23
DESIGNED: TAD
DRAWN: TAD

BAR IS ONE INCH ON ORIGINAL
0 1"
IF NOT ONE INCH ON THIS SHEET ADJUST SCALES ACCORDINGLY

DRAWING NUMBER

SHEET NUMBER
E4.0

THIS DRAWING IS THE PROPERTY OF JENKINS ENGINEERING, INC. AND IS NOT TO BE REPRODUCED WITHOUT EXPRESSED WRITTEN CONSENT

TAD> M:\Jobs_Active\21174 Jet Drive Recreation Park\21174E10.dwg 03/02/23 10:49

File: M:\Jobs_Active\21174 Jet Drive Recreation Park\21174E40.dwg - Last Saved: 2/29/2024 1:28 PM by TDean

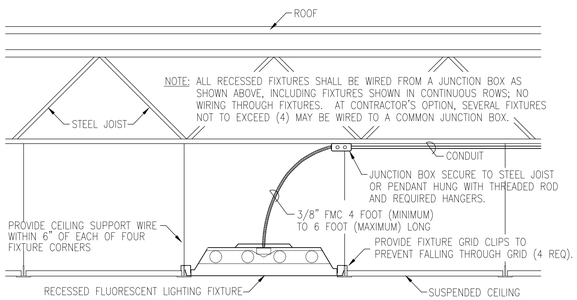

TYPICAL RECESSED FIXTURE INSTALLATION DETAIL

SCALE: NONE

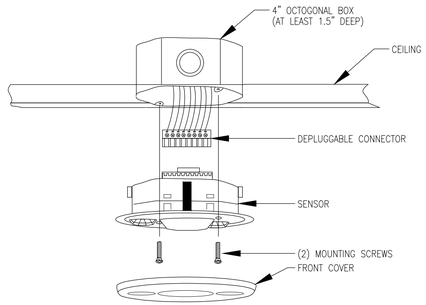

DUAL TECHNOLOGY MOUNTING DETAIL – CEILING MOUNT

NOT TO SCALE

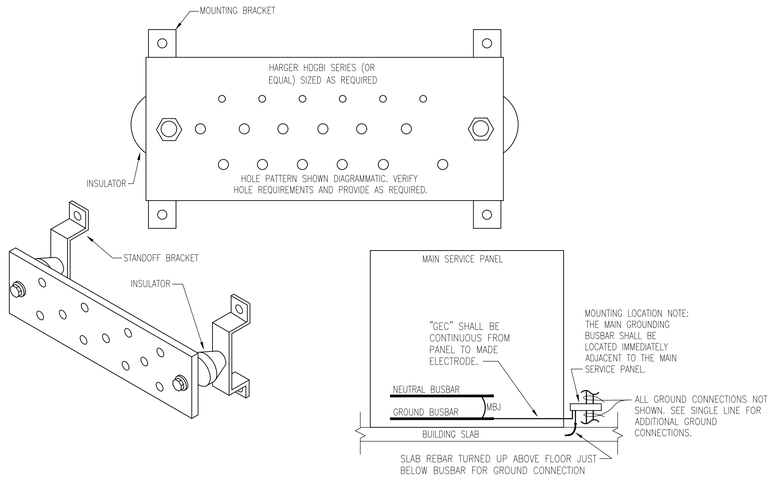

MAIN GROUNDING BUSBAR DETAIL

NOT TO SCALE

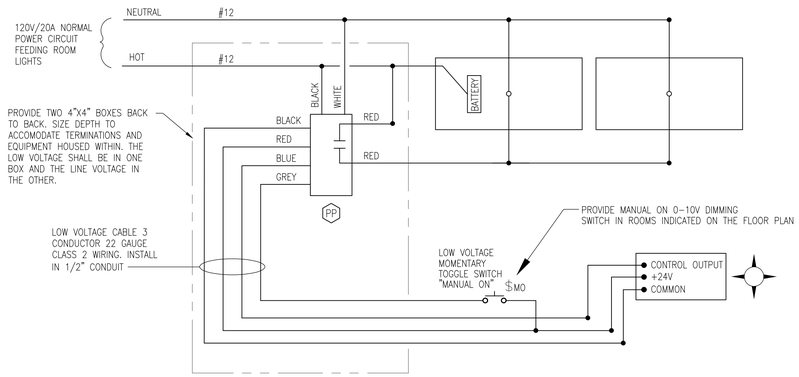

TYPICAL OCCUPANCY SENSOR WIRING DIAGRAM

NOT TO SCALE

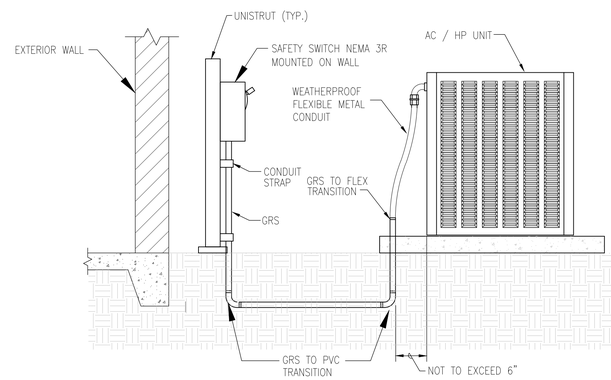

TYPICAL EXTERIOR AC/HP ELECTRICAL CONNECTION DETAIL

NOT TO SCALE

JENKINS ENGINEERING, INC.
121 HART STREET
NICEVILLE, FLORIDA 32578
PHONE 850.678.5141
FAX 850.729.2460
1234 AIRPORT ROAD, SUITE 126
DESTIN, FLORIDA 32541
PHONE 850.837.2448
FAX 850.837.2450
JEICIVIL.COM
C.O.A. NO. 9927

ARUN THOMAS VARGHESE LICENSE No. 76315 STATE OF FLORIDA PROFESSIONAL ENGINEER

REV	DATE	DESCRIPTION	BY

FT WALTON BEACH PARK

HOLLYWOOD BLVD.
FT. WALTON BEACH • FLORIDA

NOT VALID UNLESS BEARING ENGINEER'S ORIGINAL SIGNATURE

JOB:
DATE: 02/29/23
DESIGNED: TAD
DRAWN: TAD

BAR IS ONE INCH ON ORIGINAL
0 1"
IF NOT ONE INCH ON THIS SHEET ADJUST SCALES ACCORDINGLY

DRAWING NUMBER

SHEET NUMBER
E5.0

H.M. YONGE & ASSOCIATES, INC.
CONSULTING ENGINEERS // EST. 1988
51 EAST GREGORY STREET
PENSACOLA, FLORIDA 32502
PHONE: (850)434-2661
CERTIFICATION OF AUTHORIZATION No: 5254
MECHANICAL ENGINEER: HOWARD M. YONGE, P.E. FLORIDA REG No. 32093
MECHANICAL ENGINEER: TIMOTHY J. MITCHELL, P.E. FLORIDA REG No. 66792
ELECTRICAL ENGINEER: ARUN T. VARGHESE, P.E. FLORIDA REG No. 76315

H. M. YONGE AND ASSOC. JOB# 21-174

THIS DRAWING IS THE PROPERTY OF JENKINS ENGINEERING, INC. AND IS NOT TO BE REPRODUCED WITHOUT EXPRESSED WRITTEN CONSENT

TAD> M:\Jobs_Active\21174 Jet Drive Recreation Park\21174E10.dwg 03/02/23 10:49

File: M:\Jobs_Active\21174 Jet Drive Recreation Park\21174E10.dwg - Last Saved: 2/20/2024 1:38 PM by TDean